VALCON
VALUE CONNECTORS

# *PCB Surface Mount CR2032 Cutaway Battery Holder* *BH-004-R Series*

PCB Surface mount type with cutaway for use with CR2032 batteries

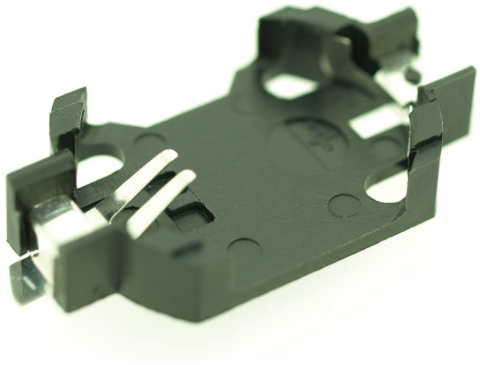

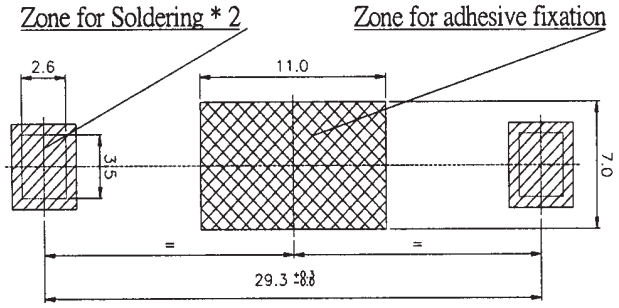


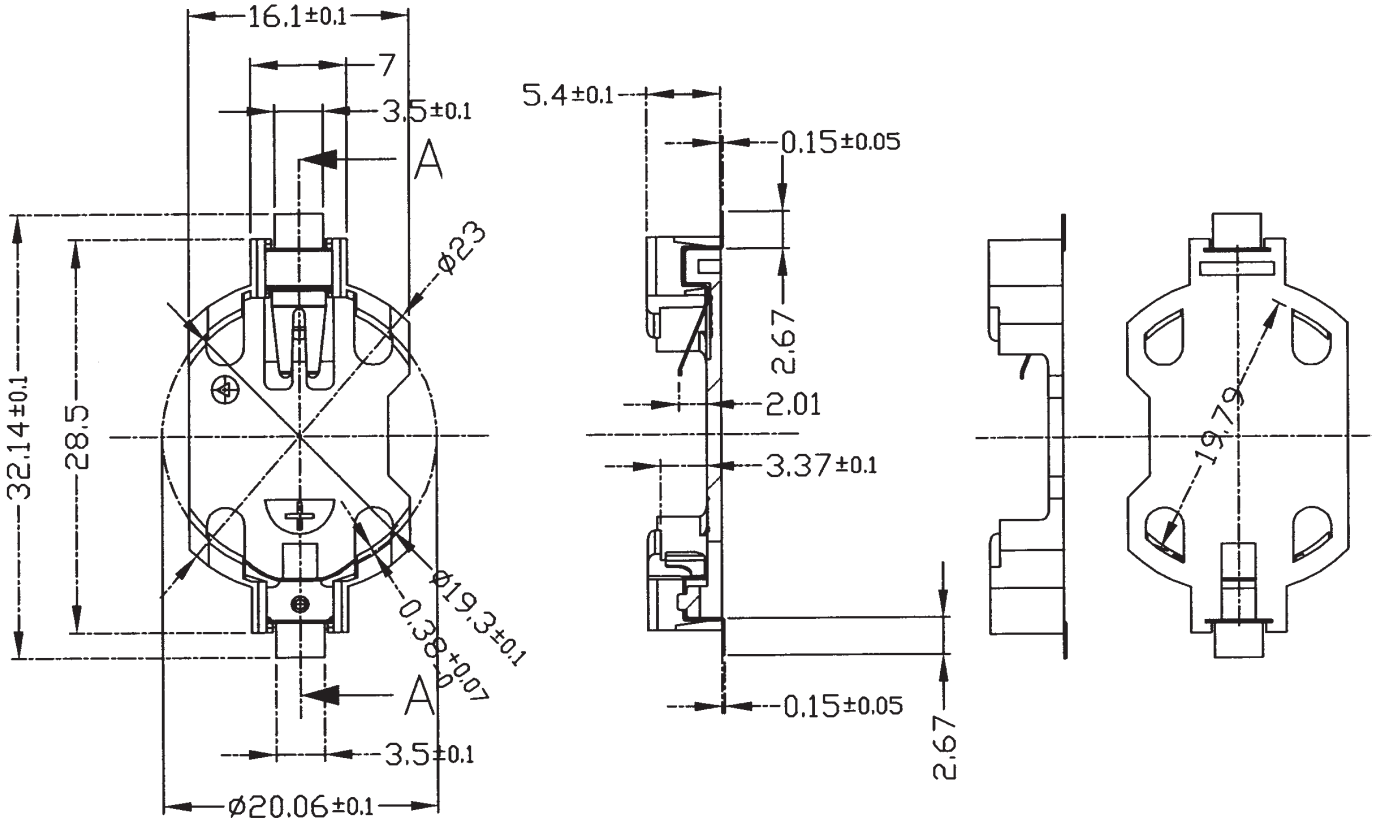


## *Ordering Information:*

*BH-004-R*

## *Specification:*

| | |
|---|---|
| Insulator Material: | LCP UL94V-0 Black |
| Contact Material: | Stainless Steel 301 (0.15t) |
| Contact Plating: | Tin 40u" min. over Ni 15u"min. |
| Contact Retention: | 1.2KGS (50 mating cycles) |
| Rating: | DC 3V, 120mA |
| Contact Resistance: | 100mΩ Max. (positive & negative) |
| Insulation Resistance: | 100MΩ min. at 500VDC (between terminals) |
| Operating Temperature: | -40°C to +105°C |

***Tel: 01295 271777 Fax: 01295 271744 Web: www.toby.co.uk email: sales@toby.co.uk***