F-215 (Rev 13JUL15)

samtec

TOBY
THE VITAL COMPONENT

QSTRIP®

(0.80 mm) .0315"

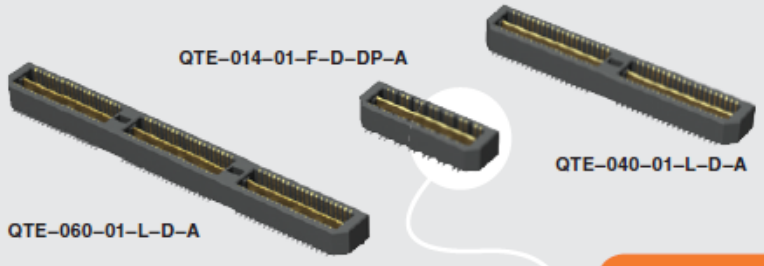

QTE SERIES

HIGH SPEED GROUND PLANE HEADER

SPECIFICATIONS

For complete specifications and recommended PCB layouts see www.samtec.com?QTE

Insulator Material:
Liquid Crystal Polymer
Terminal Material:
Phosphor Bronze
Plating: Au or Sn over 50µ" (1.27 µm) Ni
Current Rating:
Contact:
2 A per pin
(1 pin powered per row)
Ground Plane:
23 A per ground plane
(1 ground plane powered)
Operating Temp Range:
-55°C to +125°C
Voltage Rating:
225 VAC mated with QSE & 5 mm Stack Height
Max Cycles: 100
RoHS Compliant: Yes

Processing:

Lead–Free Solderable: Yes
SMT Lead Coplanarity:
(0.10 mm) .004" max (020-060)
Board Stacking:
For applications requiring more than two connectors per board contact ipg@samtec.com

RECOGNITIONS

For complete scope of recognitions see www.samtec.com/quality

ALSO AVAILABLE
(MOQ Required)

- 15 mm, 22 mm and 30 mm stack height (Caution: Some automatic placement/inspection machines may have component height restrictions. Please consult machinery specifications.)
- 30µ" (0.76 µm) Gold (Specify -H plating for Data Rate cable mating applications.)
- Edge Mount
- 56 (-DP), 80, 100 positions per row
- Guide Posts, Screw Down & Friction Lock
- Retention Option

Contact Samtec.

Board Mates:
QSE

Cable Mates:
EQCD, EQDP, EQRF
(See Also Available note)

E.L.P.™
EXTENDED LIFE PRODUCT
10 year Mixed Flowing Gas with 60µ" Gold
Call Samtec for maximum mated cycles

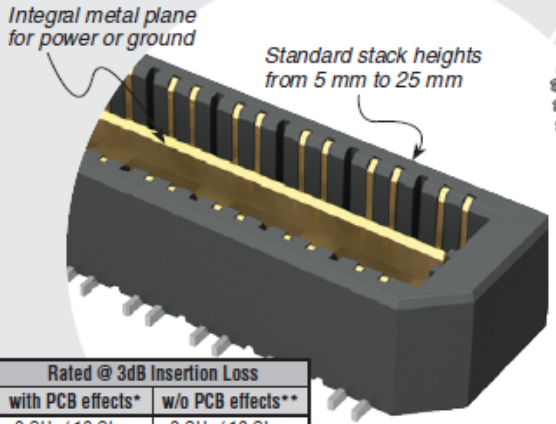

Protocols Supported
100 GbE
XAUI
PCI Express®
SATA
MGT (Rocket I/O)
InfiniBand™
Download app notes at www.samtec.com/approte
Contact SIG @ samtec.com for questions on protocols

QTE/QSE 5 mm Stack Height	Type	Rated @ 3dB Insertion Loss	
		with PCB effects*	w/o PCB effects**
Single-Ended Signaling	–D	9 GHz / 18 Gbps	9 GHz / 18 Gbps
Differential Pair Signaling	–D	8 GHz / 16 Gbps	14 GHz / 28 Gbps
Differential Pair Signaling	–DP	8.5 GHz / 17 Gbps	13.5 GHz / 27 Gbps

*Performance data includes effects of a non-optimized PCB.
**Test board losses de-embedded from performance data.
Performance data for other stack heights and complete test data available at www.samtec.com?QTE or contact sig@samtec.com

Final Inch® CERTIFIED | 28+ Gbps

QTE – PINS PER ROW NO. OF PAIRS – LEAD STYLE – PLATING OPTION – TYPE – A – OTHER OPTION

–020, –040, –060
(40 total pins per bank = –D)

–014, –028, –042
(14 pairs per bank = –D–DP)

Specify LEAD STYLE from chart

–F
= Gold Flash on Signal Pins and Ground Plane, Matte Tin on tails

–L
= 10µ" (0.25 µm) Gold on Signal Pins and Ground Plane, Matte Tin on tails

–C*
= Electro-Polished Selective 50µ" (1.27 µm) min Au over 150µ" (3.81 µm) Ni on Signal Pins in contact area, 10µ" (0.25 µm) min Au over 50µ" (1.27 µm) Ni on Ground Plane in contact area, Matte Tin over 50µ" (1.27 µm) min Ni on all solder tails

–D
= Single-Ended

–D–DP
= Differential Pair (–01 only)

–K
= (7.00 mm) .275" DIA Polyimide Film Pick & Place Pad

–TR
= Tape & Reel Packaging (N/A –05 & –07 lead style)

–L
= Latching Option (N/A on –042 & –060 positions)

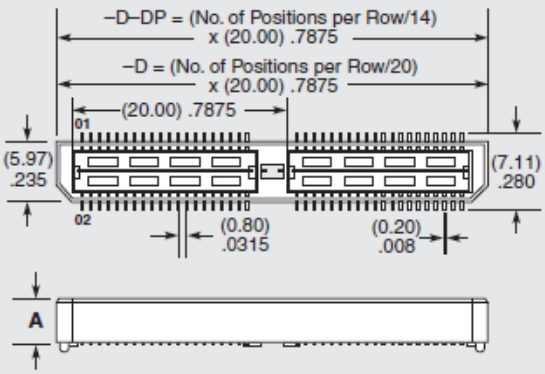

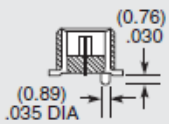

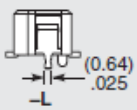

QTE LEAD STYLE	A	HEIGHT WITH QSE*
–01	(4.27) .168	(5.00) .197
–02	(7.26) .286	(8.00) .315
–03	(10.27) .404	(11.00) .433
–04	(15.25) .600	(16.00) .630
–05	(18.26) .718	(19.00) .748
–07	(24.24) .954	(25.00) .984
–09	(13.26) .522	(14.00) .551

*Processing conditions will affect mated height.

***Note:** –C Plating passes 10 year MFG testing

Note: Some lengths, styles and options are non-standard, non-returnable.

OTHER SOLUTIONS

- Board Spacing Standoffs. See SO Series

Due to technical progress, all designs, specifications and components are subject to change without notice.

REVISION AQ

DO NOT SCALE FROM THIS PRINT

Ⓧ = ASO ONLY (APPLICATION SPECIFIC ORDER)

TABLE 1

STYLE	"B"	"C"	BODY	GROUND PLANE	TERMINAL	MATED HEIGHT WITH QSE-DP-01
-01	.1680 [4.267]	.1600 [4.064]	QTE-20-01-D-XX	T-1G1-01-XXX	T-1S39-01-XXX	.197 [5.00] REF
-02	.2861 [7.267]	.2781 [7.064]	QTE-20-02-D-XX	T-1G1-02-XXX	T-1S59-02-XXX	.315 [8.00] REF
-03	.4042 [10.267]	.3962 [10.063]	QTE-20-03-D-XX	T-1G1-03-XXX	T-1S39-03-XXX	.433 [11.00] REF

TABLE 3

No OF POS	"A"	"D"
-014	.788 [20.00]	.728 [18.48]
-028	1.575 [40.01]	1.515 [38.48]
-042	2.363 [60.01]	2.303 [58.48]
*-056	3.150 [80.01]	3.090 [78.49]
*-070	3.938 [100.01]	3.878 [98.49]

* = SEE NOTE 15

TABLE 2

No OF POSITIONS	COPLANARITY (INCLUDES GROUND PLANE)
-014 THRU -042	.004 [0.10]
*-056 THRU *-070	.006 [0.15]

* = SEE NOTE 15

QTE-XXX-XX-XXX-D-DP-XXX

No OF POSITIONS
-014, -028, -042,
-056,-070
(PER ROW)
(*SEE NOTE 15)

LEAD STYLE
-01: .1680 [4.267] (SEE FIG 1)
-02: .2861 [7.264] (SEE FIG 1)
-03: .4042 [1.123] (SEE FIG 1)
Ⓧ -04: .600[15.24] (SEE FIG 4, SHT 3)
Ⓧ -05: .718[18.237] (SEE FIG 4, SHT 3)
Ⓧ -06: .835[21.209] (SEE FIG 4, SHT 3)
Ⓧ -07: .954[24.232]
Ⓧ -08: 1.151[29.24]
Ⓧ -09: .522[13.258]
Ⓧ -10: .5606[14.239]

PLATING SPECIFICATION
-F: 3µ" FLASH GOLD IN CONTACT AREA, MATTE TIN ON TAIL (USE T-1SXX-XX-F, T-1G1-XX-F) (SEE NOTE 9)
-L: 10µ" LIGHT GOLD IN CONTACT AREA, MATTE TIN ON TAIL (USE T-1SXX-XX-L, T-1G1-XX-L)
-H: 30µ" HEAVY GOLD IN CONTACT AREA, 3µ" GOLD ON TAIL (USE T-1SXX-XX-H, T-1G1-XX-G)
-C: 50µ" ELECTRO-POLISHED SELECTIVE IN CONTACT AREA, MATTE TIN ON TAIL (USE T-1SXX-XX-C, T-1G1-XX-L)
-STL: 30µ" HEAVY SELECTIVE GOLD IN CONTACT AREA, TIN LEAD ON TAIL (USE T-1SXX-XX-STL, T-1G1-XX-STL)
-FTL: 3µ" FLASH SELECTIVE GOLD IN CONTACT AREA, TIN LEAD ON TAIL (USE T-1SXX-XX-FTL, T-1G1-XX-FTL)

OPTION
-A: ALIGNMENT PINS
-LC: LOCKING CLIPS(SEE NOTE 13) (USE LC-08-TM-01) (SEE FIG 2, SHT 2)
-K: POLYIMIDE FILM (USE K-DOT-.276-.375-.005) (SEE FIG 3, SHT 2) (N/A ON STYLES -07 & -08)
-GP: GUIDE POSTS (AVAILABLE ON -01 ONLY) (USE QTE-20-01-D-XX-X-GP) (SEE FIG 4, SHT 3)
-TR: TAPE & REEL (42 POS. MAX) (NOT AVAILABLE ON -05, -06, -07, -08 LEAD STYLES) (028 POS MAX FOR -GP OPTION)
-RT1: RETENTION OPTION (SEE FIG 9, SHT 5) (ONLY AVAILABLE ON -01 LEAD STYLE) (MUST USE -A OPTION) (USE QTE-20-01-D-XX-A-RT1 & T-1R36-01-F) (NOT AVAILABLE WITH -LC, -GP, OR -L) (NOT AVAILABLE ON -056 & -070 POS)
-L: LATCHING OPTION (28 POS. MAX.) (SEE FIG 10, SHT 5) (MUST USE -A OPTION) (AVAILABLE ON -01 ONLY) (NOT AVAILABLE WITH -LC, -GP, OR -RT1)

BODY STYLE
-DP: DIFFERENTIAL PAIRS

ROW SPECIFICATION
-D: DOUBLE (USE QTE-20-XX-D-XX & QTEH-20-XX-D-XX)

No OF BANKS

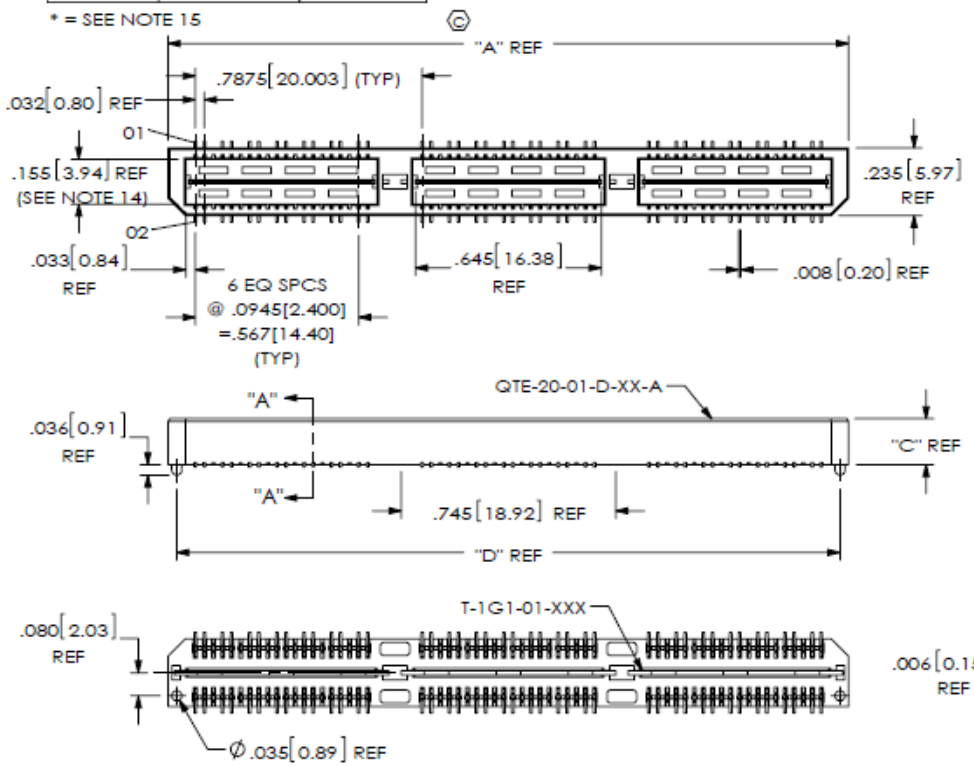

FIG 1

-A: ALIGNMENT PIN OPTION
(QTE-042-01-XXX-D-DP-A SHOWN)
(STYLE -01, -02 & -03 ONLY)

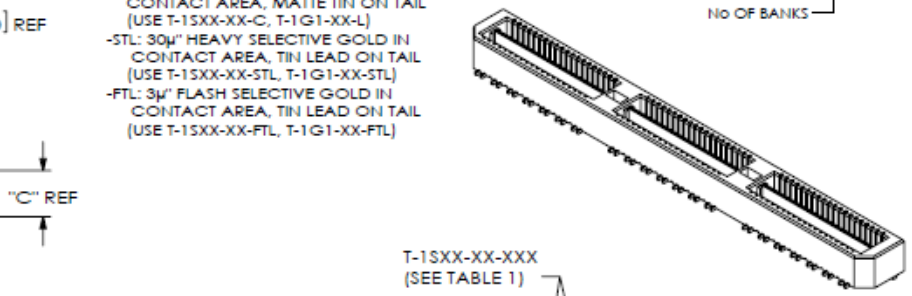

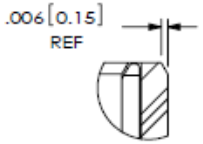

DETAIL 'B'
SCALE 6 : 1

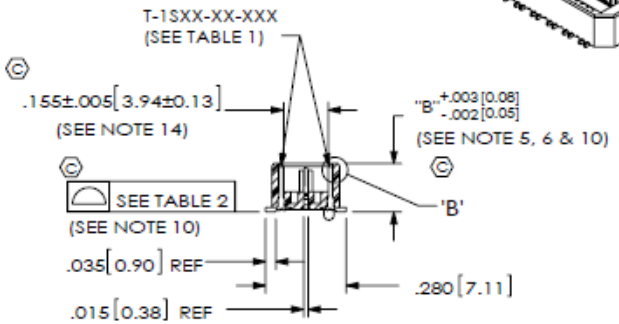

SECTION "A"-"A"

NOTES:
1. © REPRESENTS A CRITICAL DIMENSION.
2. MINIMUM TERMINAL RETENTION: 5 OZ.
3. MINIMUM GROUND PLANE RETENTION: 1 LB
4. PARTS TO BE MOLDED TO POSITION.
5. MAXIMUM VARIANCE OF .002 [0.05]
6. DIMENSION APPLIES TO TERMINALS AND GROUND PLANE.
7. DELETED.
8. DELETED.
9. -L PLATING CAN BE SUBSTITUTED FOR -F PLATING.
10. GROUND PLANE PRESS HEIGHT MUST BE .003[0.08] LESS THAN THE MAX HEIGHT OR .001 [0.03] GREATER THAN THE MINIMUM HEIGHT OF THE TERMINALS.
11. T-1R36 RETENTION TO BODY TO BE 1.0 LBF.
12. NOTE DELETED.
13. DUE TO THE HIGH AMOUNT OF INSERTION FORCE NEEDED, THE –LC OPTION IS NOT COMPATIBLE WITH AUTO PLACEMENT. SAMTEC RECOMMENDS MANUAL PLACEMENT FOR ALL ASSEMBLIES WITH THE –LC OPTION.
14. MAXIMUM PIN CAN EXTEND PAST WALL: .003[0.08]
© 15. AVAILABLE FOR EXISTING CUSTOMERS ONLY.

UNLESS OTHERWISE SPECIFIED, DIMENSIONS ARE IN INCHES.
TOLERANCES ARE:
DECIMALS .XX: ±.01[.3] .XXX: ±.005[.13] .XXXX: ±.0020[.051]
ANGLES 2°

PROPRIETARY NOTE
THIS DOCUMENT CONTAINS INFORMATION CONFIDENTIAL AND PROPRIETARY TO SAMTEC, INC. AND SHALL NOT BE REPRODUCED OR TRANSFERRED TO OTHER DOCUMENTS OR DISCLOSED TO OTHERS OR USED FOR ANY PURPOSE OTHER THAN THAT WHICH IT WAS OBTAINED WITHOUT THE EXPRESSED WRITTEN CONSENT OF SAMTEC, INC.

samtec the vital component

MATERIAL: DO NOT SCALE DRAWING SHEET SCALE: 1.5:1

INSULATOR: LCP, UL94V-0; COLOR: BLACK
TERMINAL: PHOS BRONZE
GROUND PLANE: PHOS BRONZE

F:\DWG\MISC\Mktg\QTE-XXX-XX-XXX-D-DP-XXX-MKT.SLDDRW

DESCRIPTION: .8mm DIFFERENTIAL PAIRS HS TERMINAL ASSEMBLY

DWG. NO. QTE-XXX-XX-XXX-D-DP-XXX

BY: DEAN P 4/28/2000 SHEET 1 OF 5

REVISION AQ

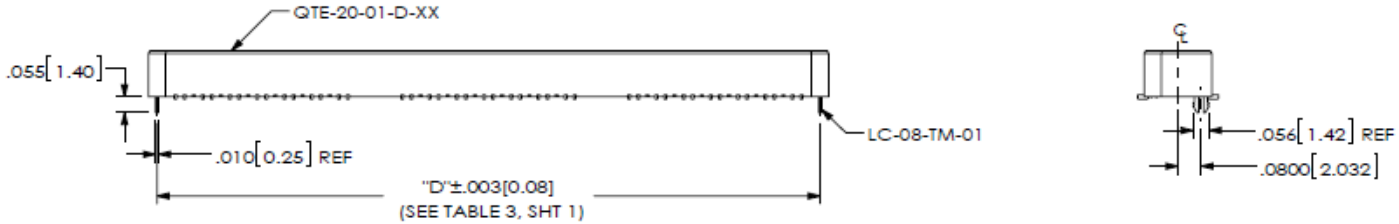

FIG 2
-LC: LOCKING CLIP OPTION
(QTS-042-01-XXX-D-DP-LC SHOWN)
(DIFFERENT AS SHOWN, OTHERWISE SAME AS FIG 1)

TABLE 4

No OF POS	"R"				"S"			
	-LC, -A, -FL	-GP,-SD	-RT1	-L	-LC, -A, -FL	-GP, -SD	-RT1	-L
-014	.788 [20.00]	1.305 [33.15]	1.438 [36.53]	.906 [23.00]	.256 [6.50]	.515 [13.07]	.581 [14.76]	.315 [7.99]
-028	1.575 [40.01]	2.093 [53.15]	2.226 [56.53]	1.693 [43.00]	.650 [16.50]	.908 [23.07]	.975 [24.76]	.709 [18.00]
-042	2.363 [60.01]	2.880 [73.15]	3.013 [76.53]	N/A	1.043 [26.50]	1.302 [33.07]	1.369 [34.76]	N/A
*-056	3.150 [80.01]	3.668 [93.15]	N/A	N/A	1.437 [36.50]	1.696 [43.07]	N/A	N/A
*-070	3.938 [100.01]	4.455 [113.16]	N/A	N/A	1.831 [46.50]	2.090 [53.07]	N/A	N/A

* = SEE NOTE 15

TABLE 5

STYLE	"T"
-01	.173[4.39]
-02	.291[7.39]
-03	.409[10.39]
-04	.605[15.37]
-05	.723[18.36]
-06	.841[21.36]
-09	.527[13.39]
-10	.567[14.37]

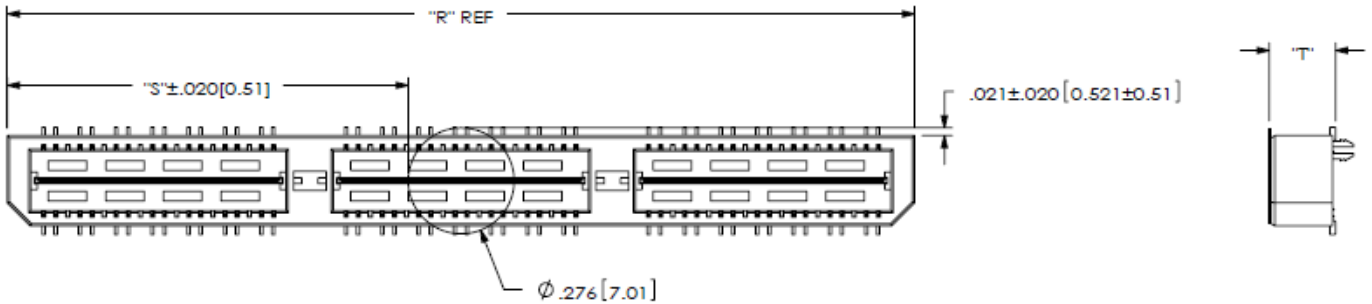

FIG 3
-K: POLYIMIDE FILM PAD
(USE K-DOT-.276-.375-.005)

PROPRIETARY NOTE
THIS DOCUMENT CONTAINS INFORMATION CONFIDENTIAL AND PROPRIETARY TO SAMTEC, INC. AND SHALL NOT BE REPRODUCED OR TRANSFERRED TO OTHER DOCUMENTS OR DISCLOSED TO OTHERS OR USED FOR ANY PURPOSE OTHER THAN THAT WHICH IT WAS OBTAINED WITHOUT THE EXPRESSED WRITTEN CONSENT OF SAMTEC, INC.

DO NOT SCALE DRAWING

SHEET SCALE: 2:1

samtec
the vital component

DESCRIPTION:
.8mm DIFFERENTIAL PAIRS HS TERMINAL ASSEMBLY

DWG. NO.
QTE-XXX-XX-XXX-D-DP-XXX

BY: DEAN P 4/28/2000 SHEET 2 OF 5

F:\DWG\MISC\Mktg\QTE-XXX-XX-XXX-D-DP-XXX-MKT.SLDDRW

REVISION AQ

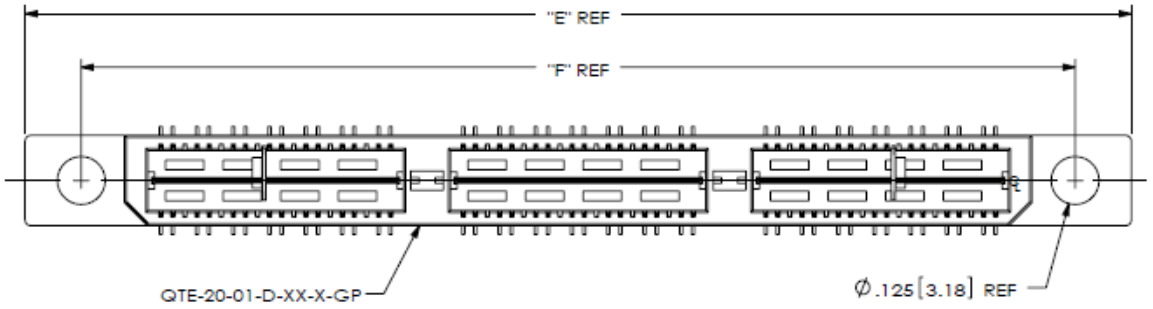

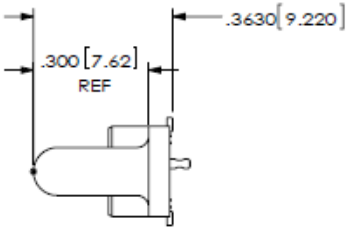

FIG 4
-GP: GUIDE POST OPTION
(QTE-042-01-XXX-D-DP-GP SHOWN)
(DIFFERENT AS SHOWN, OTHERWISE SAME AS FIG 1)
(AVAILABLE ON STYLE -01 ONLY)

TABLE 6

POS	"E"	"F"
-014	1.305 [33.15]	1.013 [25.72]
-028	2.093 [53.15]	1.800 [45.72]
-042	2.880 [73.15]	2.588 [65.72]
*-056	3.668 [93.15]	3.375 [85.73]
*-070	4.455 [113.16]	4.163 [105.73]

* = SEE NOTE 15

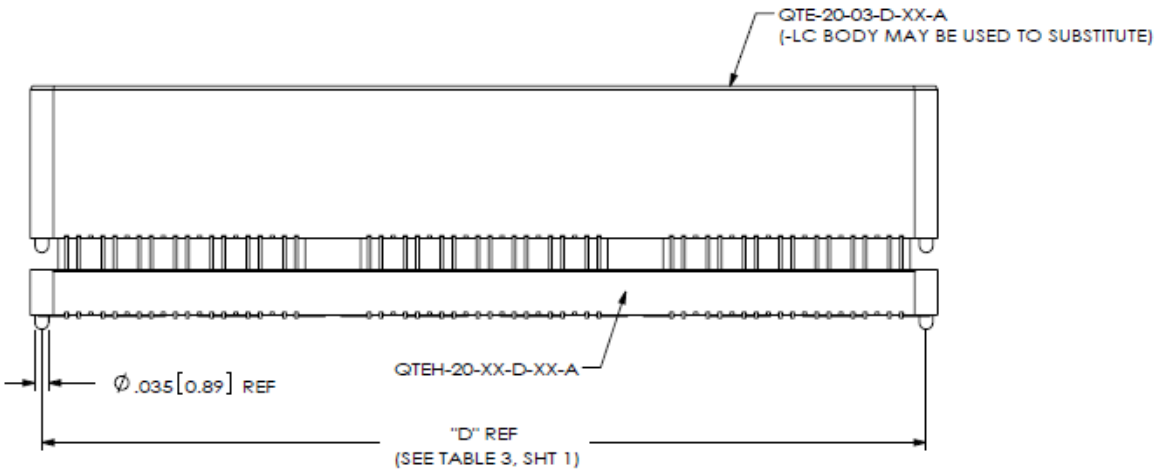

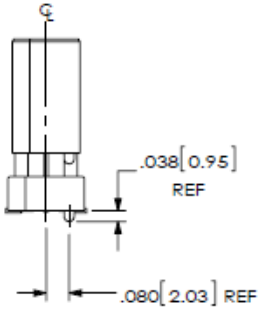

FIG 5
(QTE-020-04-XXX-D-A SHOWN)
(DIFFERENT AS SHOWN, OTHERWISE SAME AS FIG 1)
(STYLES -04, -05, -06, -07, -08, -09 & -10, SEE TABLE 7, SHT 4)

PROPRIETARY NOTE

THIS DOCUMENT CONTAINS INFORMATION CONFIDENTIAL AND PROPRIETARY TO SAMTEC, INC. AND SHALL NOT BE REPRODUCED OR TRANSFERRED TO OTHER DOCUMENTS OR DISCLOSED TO OTHERS OR USED FOR ANY PURPOSE OTHER THAN THAT WHICH IT WAS OBTAINED WITHOUT THE EXPRESSED WRITTEN CONSENT OF SAMTEC, INC.

DO NOT SCALE DRAWING

SHEET SCALE: 2:1

samtec
the vital component

DESCRIPTION:
.8mm DIFFERENTIAL PAIRS HS TERMINAL ASSEMBLY

DWG. NO.
QTE-XXX-XX-XXX-D-DP-XXX

BY: DEAN P 4/28/2000 SHEET 3 OF 5

F:\DWG\MISC\Mktg\QTE-XXX-XX-XXX-D-DP-XXX-MKT.SLDDRW

REVISION AQ

TABLE 7						MATED HEIGHT WITH QSE-DP-01
STYLE	"B"	GROUND PLANE	TERMINAL	FILLER BODY	SPACER BODY	
-04	.600[15.24]	T-1G1-04-XXX	T-1S41-04-XXX	QTE-20-03-D-XX	QTEH-20-01-D-XX-X	.630 [16.00] REF
-05	.718[18.237]	T-1G1-05-XXX	T-1S41-05-XXX	QTE-20-03-D-XX	QTEH-20-01-D-XX-X	.748 [19.00] REF
-06	.835[21.209]	T-1G1-06-XXX	T-1S41-06-XXX	QTE-20-03-D-XX	QTEH-20-02-D-XX-X	.866 [22.00] REF
-07	.954[24.232]	T-1G17-01-XXX	T-1S61-21-XXX	QTEH-20-04-D-XX-X	QTE-20-02-D-XX-X	.984 [25.00] REF
-08	1.151[29.24]	T-1G17-02-XXX	T-1S61-22-XXX	QTEH-20-04-D-XX-X	QTE-20-02-D-XX-X	1.181 [30.00] REF
-09	.522[13.259]	T-1G1-09-XXX	T-1S60-09-XXX	QTEH-20-01-D-XX-X	QTE-20-02-D-XX-X	.551[14.00] REF
-10	.5606[14.239]	T-1G1-10-XXX	T-1S60-10-XXX	QTEH-20-01-D-XX-X	QTE-20-02-D-XX-X	.591[15.00] REF

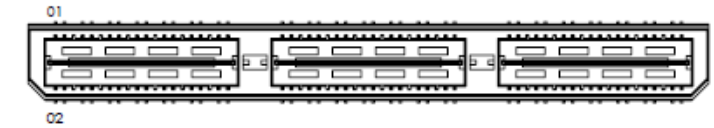

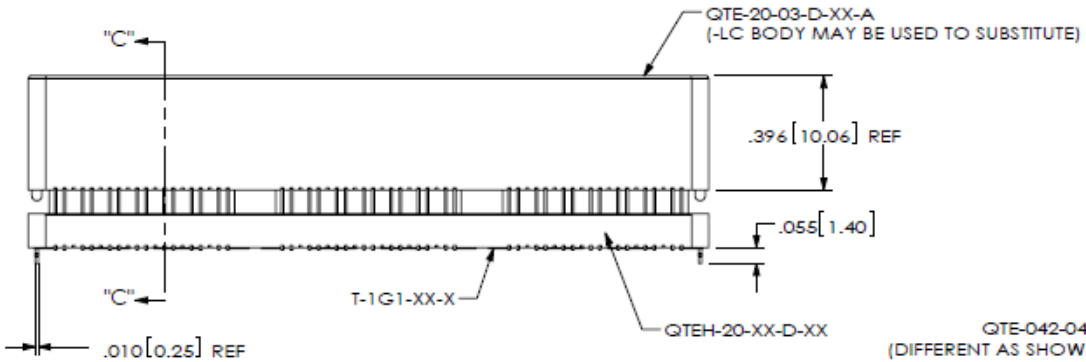

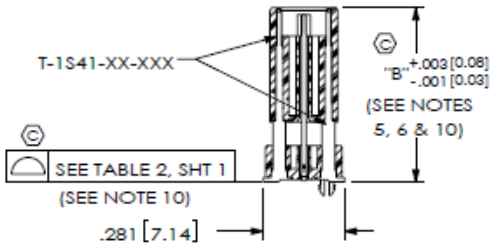

SECTION "C"-"C"

FIG 6
QTE-042-04-X-D-DP-LC SHOWN
(DIFFERENT AS SHOWN, OTHERWISE SAME AS FIG 1)
(STYLES -04, -05 & -06)

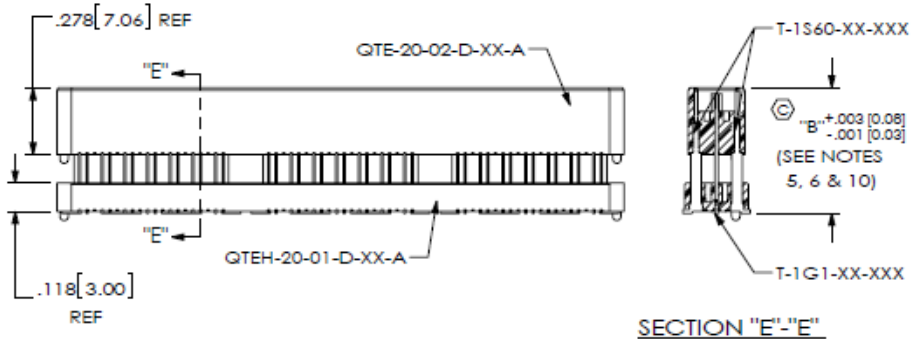

SECTION "E"-"E"
SCALE 1.25 : 1

FIG 8
QTE-042-09-X-D-DP-A SHOWN
(DIFFERENT AS SHOWN, OTHERWISE SAME AS FIG 6)
(STYLES -09 & -10)

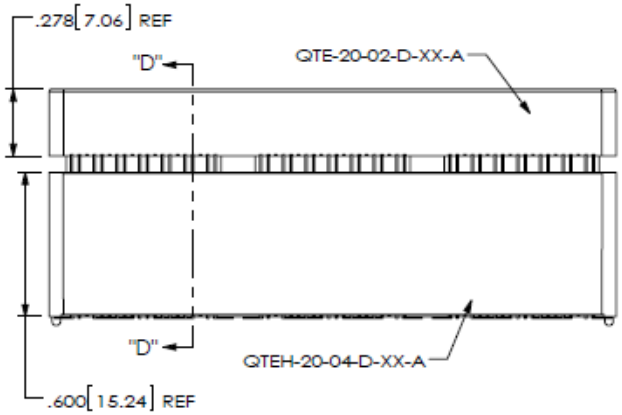

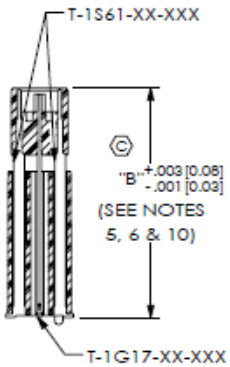

SECTION "D"-"D"
SCALE 1.25 : 1

FIG 7
QTE-042-07-X-D-DP-A SHOWN
(DIFFERENT AS SHOWN, OTHERWISE SAME AS FIG 6)
(STYLES -07 & -08)

F:\DWG\MISC\Mktg\QTE-XXX-XX-XXX-D-DP-XXX-MKT.SLDDRW

PROPRIETARY NOTE

THIS DOCUMENT CONTAINS INFORMATION CONFIDENTIAL AND PROPRIETARY TO SAMTEC, INC. AND SHALL NOT BE REPRODUCED OR TRANSFERRED TO OTHER DOCUMENTS OR DISCLOSED TO OTHERS OR USED FOR ANY PURPOSE OTHER THAN THAT WHICH IT WAS OBTAINED WITHOUT THE EXPRESSED WRITTEN CONSENT OF SAMTEC, INC.

DO NOT SCALE DRAWING

SHEET SCALE: 1.5:1

samtec
the vital component

DESCRIPTION:
.8mm DIFFERENTIAL PAIRS HS TERMINAL ASSEMBLY

DWG. NO.
QTE-XXX-XX-XXX-D-DP-XXX

BY: DEAN P 4/28/2000

REVISION AQ

TABLE 8		
POS	"G"	"H"
-014	1.438 [36.53]	1.129 [28.68]
-028	2.226 [56.53]	1.917 [48.68]
-042	3.013 [76.53]	2.704 [68.68]
*-056	N/A	N/A
*-070	N/A	N/A

* = SEE NOTE 15

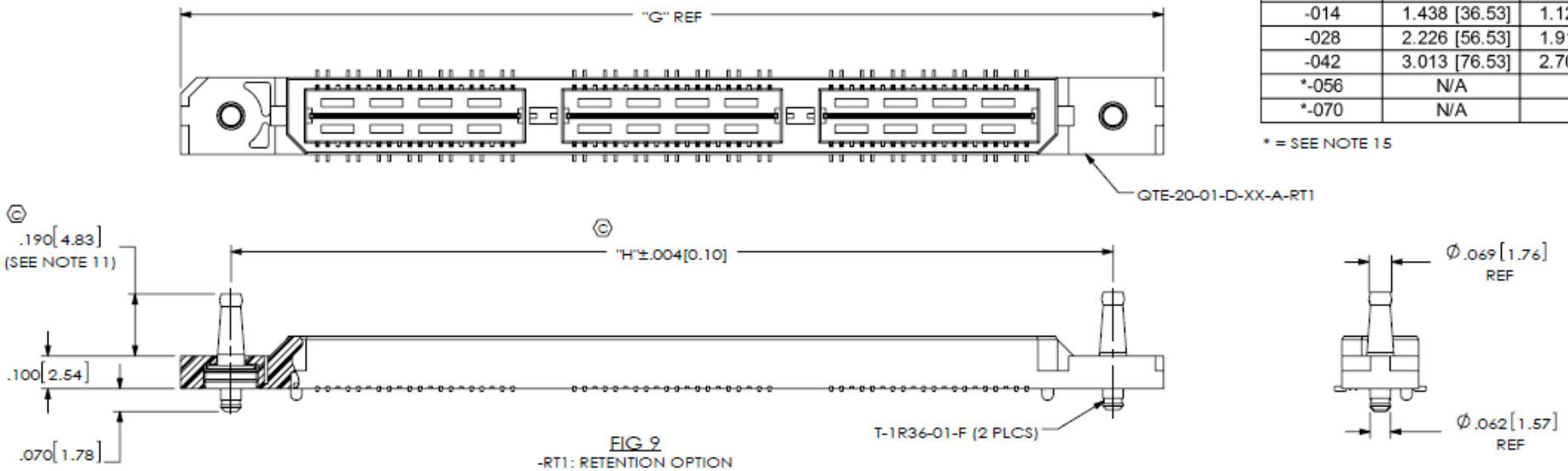

FIG 9
-RT1: RETENTION OPTION
(QTE-042-01-XXX-D-DP-A-RT1 SHOWN)
(DIFFERENT AS SHOWN, OTHERWISE SAME AS FIG 1)
(ONLY AVAILABLE ON -01 LEAD STYLE)(MUST USE -A OPTION)
(NOT AVAILABLE WITH -LC, -GP, OR -L OPTIONS)
(NOT AVAILABLE ON *-056 & *-070 POSITIONS)
* = SEE NOTES 12 & 15

TABLE 9			
POS	"J"	"K"	"L"
-014	.906 [23.00]	.915 [23.24]	.854 [21.69]
-028	1.693 [43.00]	1.703 [43.24]	1.642 [41.69]
-042	N/A	N/A	N/A
*-056	N/A	N/A	N/A
*-070	N/A	N/A	N/A

* = SEE NOTE 15

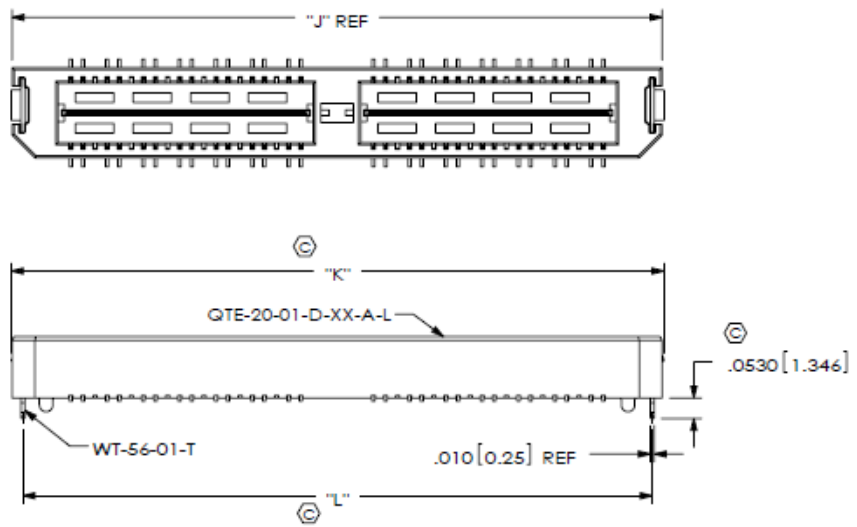

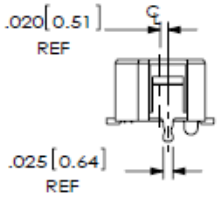

FIG 10
-L: LATCHING OPTION
(QTE-028-01-XXX-D-DP-A-L SHOWN)
(DIFFERENT AS SHOWN, OTHERWISE SAME AS FIG 1)
(28 POS MAX) (MUST USE -A OPTION)
(AVAILABLE ON -01 LEAD SYTLE ONLY)
(NOT AVAILABLE WITH -LC, -GP, OR -RT1)

CRITICAL DIMENSION INSPECTION INSTRUCTION TABLE	
ASSEMBLY OPERATION	IN PROCESS INSPECTION
FILL T-1SXX	C1, C2, C3, C4, C5, C11, C12
ADD -LC OPTION	C13
ADD -RT1 OPTION	C6, C7
ADD -L OPTION	C8, C9, C10
ADD -K OPTION	C14, C15

PROPRIETARY NOTE

THIS DOCUMENT CONTAINS INFORMATION CONFIDENTIAL AND PROPRIETARY TO SAMTEC, INC. AND SHALL NOT BE REPRODUCED OR TRANSFERRED TO OTHER DOCUMENTS OR DISCLOSED TO OTHERS OR USED FOR ANY PURPOSE OTHER THAN THAT WHICH IT WAS OBTAINED WITHOUT THE EXPRESSED WRITTEN CONSENT OF SAMTEC, INC.

DO NOT SCALE DRAWING

SHEET SCALE: 2:1

samtec
the vital component

DESCRIPTION:
.8mm DIFFERENTIAL PAIRS HS TERMINAL ASSEMBLY

DWG. NO.
QTE-XXX-XX-XXX-D-DP-XXX

BY: DEAN P 4/28/2000 SHEET 5 OF 5

F:\DWG\MISC\Mktg\QTE-XXX-XX-XXX-D-DP-XXX-MKT.SLDDRW

REVISION W

DO NOT SCALE FROM THIS PRINT

TABLE 1					
EDGE MOUNT THICKNESS	"A"	"B"	"C"	BODY	CONTACT
-EM2	.130[3.30]	.0670[1.702]	.058[1.47]	QTE-20-01-D-EM2-XX	T-1S42-01-XXX
*-EM3	.160[4.06]	.0980[2.489]	.088[2.24]	QTE-20-01-D-EM3-XX	T-1S42-02-XXX

* = SEE NOTE 11

QTE-XXX-01-XXX-D-DP-EMX-XX

No OF POSITIONS
-014, -028, -042
**-056, **-070
(PER ROW)
**SEE NOTE 14

LEAD STYLE
-01: .1680 [4.267]

OPTION
-GP: GUIDE POST
(USE QTE-20-01-D-EMX-XX-GP
(SEE FIG 2, SHEET 2)

EDGE MOUNT THICKNESS
-EM2: .064[1.63] +/-.004 PCB
(USE QTE-20-01-D-EM2-XX & T-1S42-01-XXX)
***-EM3:(USE QTE-20-01-D-EM3-XX & T-1S42-02-XXX)**
(SEE NOTE 11)

DIFFERENTIAL PAIR

ROW SPECIFICATION
-D: DOUBLE (USE QTE-20-XX-D-EMX-XX)

No OF BANKS

* = NOT ENGINEERING APPROVED

PLATING SPECIFICATION
-F: 3μ" SELECTIVE GOLD IN CONTACT AREA, MATTE TIN ON TAIL (T-1S42-XX-F & T-1G1-01-F SEE NOTE 6)
-L: 10μ" SELECTIVE GOLD IN CONTACT AREA, MATTE TIN ON TAILS (USE T-1S42-XX-L & T-1G1-01-L)
-H: 30μ" GOLD IN CONTACT AREA, 3μ" GOLD ON TAIL (USE T-1S42-XX-H & T-1G1-01-G)
-STL: 30μ" SELECTIVE GOLD IN CONTACT AREA, TIN/LEAD (90%/10 +/-5%) TAIL (USE T-1S42-XX-STL & T-1G1-01-STL)
-FTL: 3μ" SELECTIVE GOLD IN CONTACT AREA, TIN/LEAD (90%/10 +/-5%) TAIL (USE T-1S42-XX-FTL & T-1G1-01-FTL)

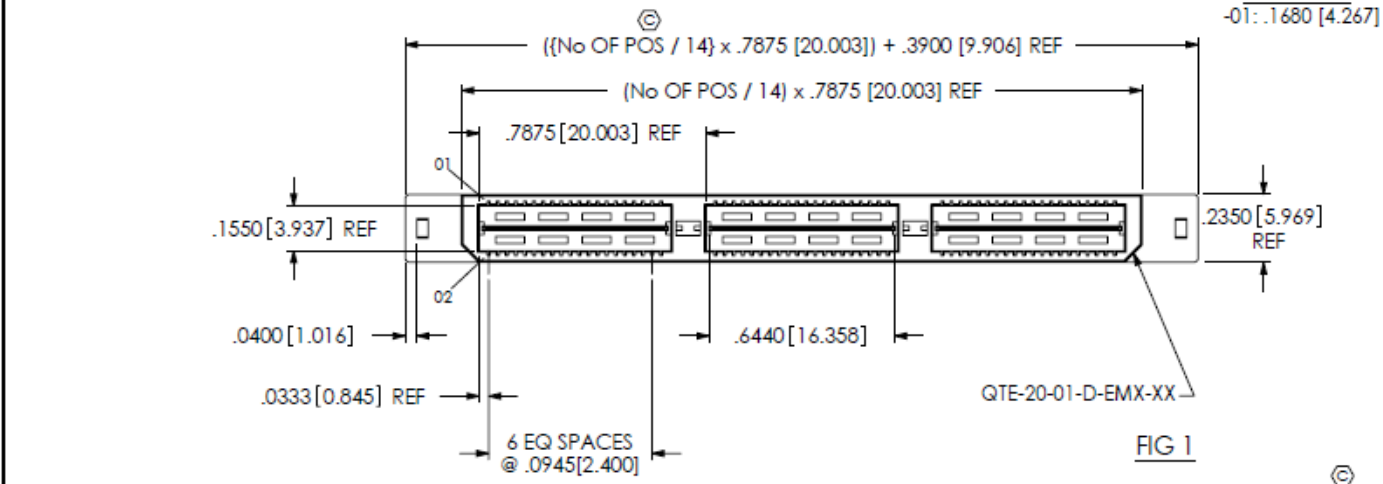

FIG 1

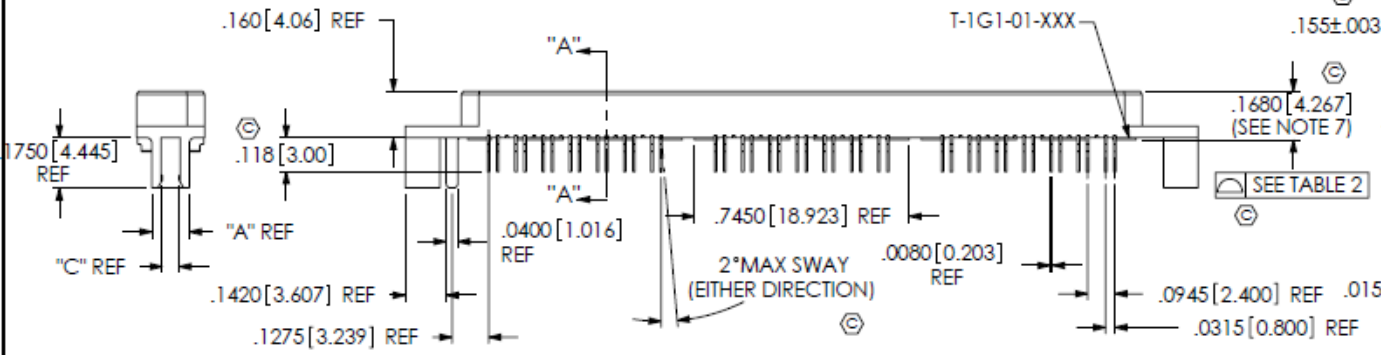

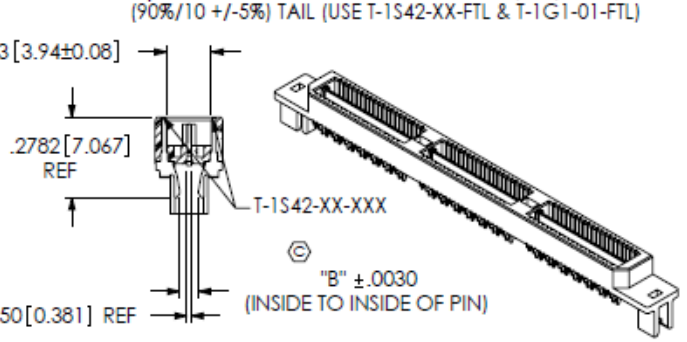

SECTION "A"-"A"

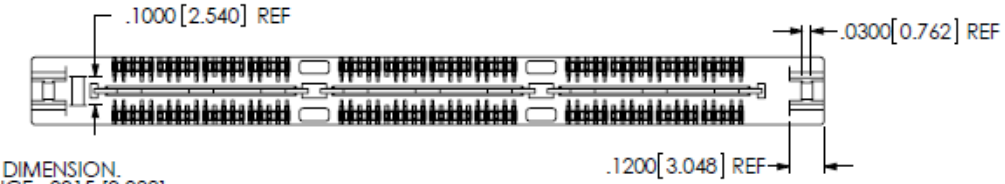

TABLE 2		
No OF POSITIONS	GND PLANE COPLANARITY	ASSEMBLY BOW
-014 THRU -042	.0040	.0040
**-056 THRU **-070	.0050	.0050

** = SEE NOTE 14

NOTES:

1. © REPRESENTS A CRITICAL DIMENSION.
2. MAXIMUM BURR ALLOWANCE: .0015 [0.038]
3. MINIMUM TERMINAL RETENTION: 6 OZ.
4. MINIMUM GROUND PLANE RETENTION: 1 LB.
5. PARTS TO BE MOLD-TO-POSITION.
6. -L PLATING CAN BE SUBSTITUTED FOR -F PLATING.
7. MAXIMUM VARIANCE OF .002 [0.05]
8. NOTE DELETED.
9. BOARD THICKNESS TO BE MEASURED FROM SOLDER PAD TO SOLDER PAD.
10. Http://www.samtec.com/processing/edgemt_tectalk/index.htm FOR INFORMATION ON PROCESSING EM PARTS.
11. -EM3 IS NOT A STANDARD OFFERING; AVAILABLE AS AN ASP ONLY. PLEASE CONTACT SAMTEC INTERCONNECT PROCESSING GROUP WITH ORDER INQUIRIES
12. NOTE DELETED.
13. PARTS WITHOUT -TY OPTION SHALL BE PACKAGED IN TRAYS.
14. AVAILABLE FOR EXISTING CUSTOMERS ONLY.

UNLESS OTHERWISE SPECIFIED, DIMENSIONS ARE IN INCHES.
TOLERANCES ARE:
DECIMALS ANGLES
.XX: ±.01 [.3] 2°
.XXX: ±.005 [.13]
.XXXX: ±.0020 [.051]

PROPRIETARY NOTE
THIS DOCUMENT CONTAINS INFORMATION CONFIDENTIAL AND PROPRIETARY TO SAMTEC, INC. AND SHALL NOT BE REPRODUCED OR TRANSFERRED TO OTHER DOCUMENTS OR DISCLOSED TO OTHERS OR USED FOR ANY PURPOSE OTHER THAN THAT WHICH IT WAS OBTAINED WITHOUT THE EXPRESSED WRITTEN CONSENT OF SAMTEC, INC.

samtec the vital component

MATERIAL: DO NOT SCALE DRAWING SHEET SCALE: 1.5:1

INSULATOR: LCP, COLOR: BLACK
TERMINAL & GROUND PLANE: PHOS BRONZE

DESCRIPTION: .8mm HS EDGEMOUNT TERMINAL ASSEMBLY

DWG. NO. QTE-XXX-01-XXX-D-DP-EMX-XX

F:\DWG\MISC\MKTG\QTE-XXX-01-XXX-D-DP-EMX-XX-MKT.SLDDRW

BY: KEVIN B 12/12/00 SHEET 1 OF 2

REVISION W

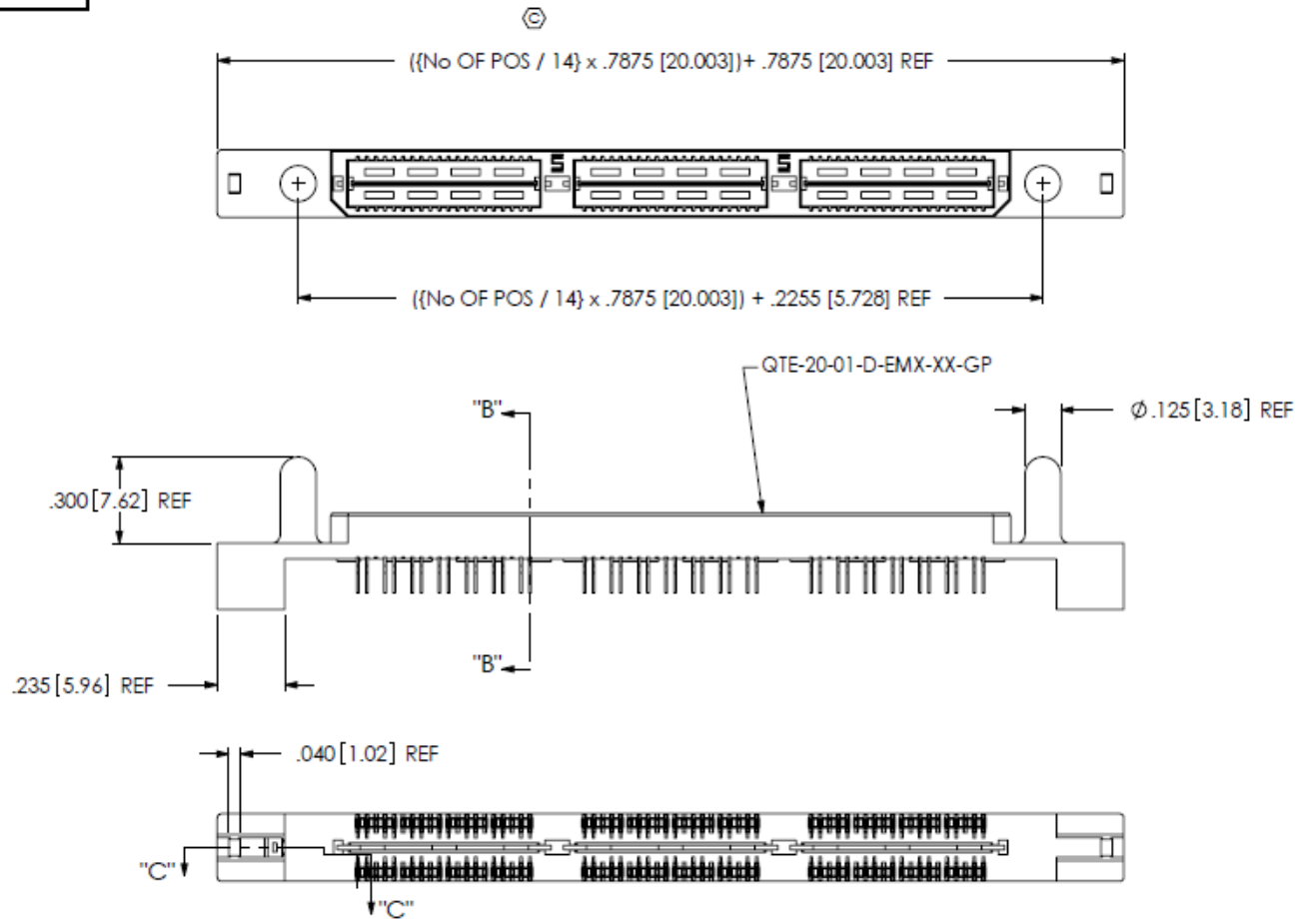

FIG 2

-GP OPTION SHOWN
(SAME AS FIG 1, UNLESS OTHERWISE STATED)

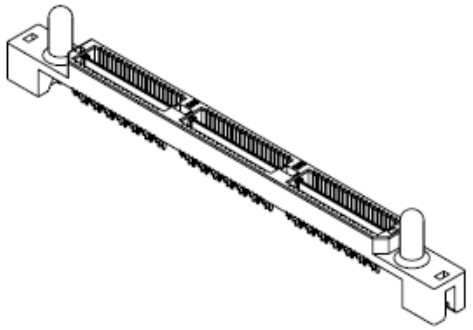

SECTION "B"-"B"

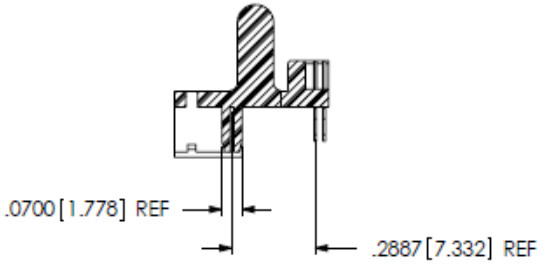

SECTION "C"-"C"

F:\DWG\MISC\MKTG\QTE-XXX-01-XXX-D-DP-EMX-XX-MKT.SLDDRW

PROPRIETARY NOTE

THIS DOCUMENT CONTAINS INFORMATION CONFIDENTIAL AND PROPRIETARY TO SAMTEC, INC. AND SHALL NOT BE REPRODUCED OR TRANSFERRED TO OTHER DOCUMENTS OR DISCLOSED TO OTHERS OR USED FOR ANY PURPOSE OTHER THAN THAT WHICH IT WAS OBTAINED WITHOUT THE EXPRESSED WRITTEN CONSENT OF SAMTEC, INC.

DO NOT SCALE DRAWING

SHEET SCALE: 1.5:1

samtec

the vital component

DESCRIPTION: .8mm HS EDGEMOUNT TERMINAL ASSEMBLY

DWG. NO. QTE-XXX-01-XXX-D-DP-EMX-XX

BY: KEVIN B 12/12/00

SHEET 2 OF 2

REVISION AG

TABLE 2					
EDGE MOUNT THICKNESS	"A"	"B"	"C"	BODY	CONTACT
-EM2	.130[3.30]	.0670[1.702]	.058[1.47]	QTE-20-01-D-EM2-XX	T-1S42-01-XXX
*-EM3	.160[4.06]	.0980[2.489]	.088[2.24]	QTE-20-01-D-EM3-XX	T-1S42-02-XXX

* = SEE NOTE 13

QTE-XXX-01-XXX-D-EMX-XX

No OF POSITIONS
-020, -040, -060,
**-080, **-100
(PER ROW)

**SEE NOTE 16

LEAD STYLE
-01: .1680[4.267]

OPTION
-GP: GUIDE POST
(USE QTE-20-01-D-EMX-XX-GP, SEE FIG 2, SHEET 2)
-TY: TRAY PACKAGING

EDGE MOUNT THICKNESS
-EM2: .064[1.63] +/-.004 PCB
(USE QTE-20-01-D-EM2-XX & T-1S42-01-X)
-EM3:
(USE QTE-20-01-D-EM3-XX & T-1S42-02-X)
(SEE NOTE 13)

ROW SPECIFICATION
-D: DOUBLE (USE QTE-20-XX-D-EMX-XX)

No OF BANKS

PLATING SPECIFICATION
-F: 3µ" SELECTIVE GOLD IN CONTACT AREA, MATTE TIN ON TAILS
(USE T-1S42-XX-F & T-1G1-01-F) (SEE NOTE 11)
-L: 10µ" SELECTIVE GOLD IN CONTACT AREA, MATTE TIN ON TAILS
(USE T-1S42-XX-L & T-1G1-01-L)
-H: 30µ" GOLD IN CONTACT AREA, 3µ" GOLD ON TAIL
(USE T-1S42-XX-H & T-1G1-01-G)
-C: 50µ" GOLD IN CONTACT AREA, 3µ" GOLD ON TAIL
(USE T-1S42-XX-C & T-1G1-01-L)
-STL: 30µ" SELECTIVE GOLD IN CONTACT AREA, TIN/LEAD (90%/10 +/-5%) TAIL
(USE T-1S42-XX-STL & T-1G1-01-STL)
-FTL: 3µ" SELECTIVE GOLD IN CONTACT AREA, TIN/LEAD (90%/10 +/-5%) TAIL
(USE T-1S42-XX-FTL & T-1G1-01-FTL)

DO NOT SCALE FROM THIS PRINT

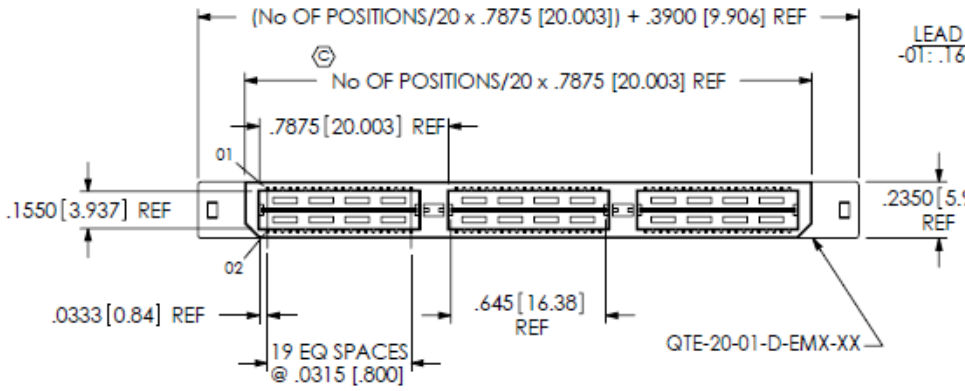

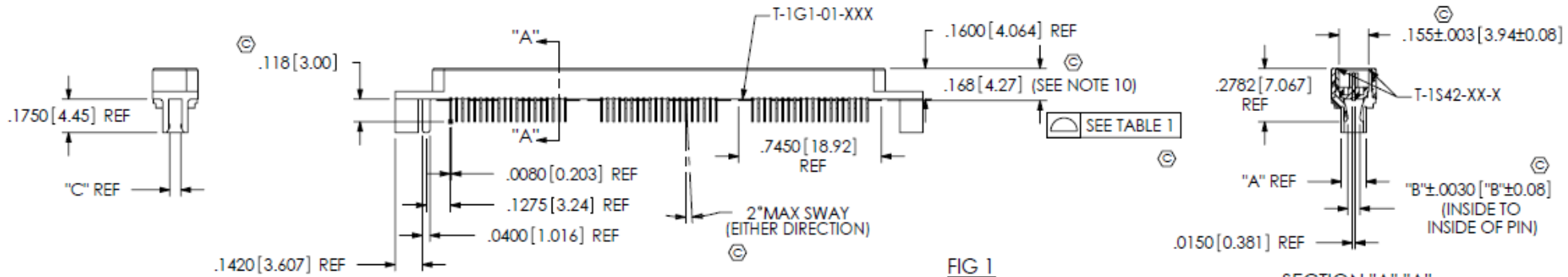

FIG 1
QTE-060-01-XXX-D-EM2 SHOWN

SECTION "A"-"A"

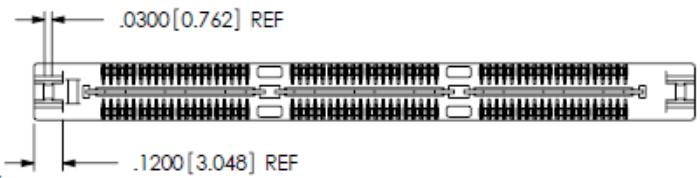

TABLE 1		
No OF POSITIONS	GND PLANE COPLANARITY	ASSEMBLY BOW
-020 THRU -060	.004 [0.10]	.004 [0.10]
-080 THRU -100	.005[1.27]	.005[1.27]

** = SEE NOTE 16

NOTES:

1. Ⓒ REPRESENTS A CRITICAL DIMENSION.
2. NOTE DELETED.
3. MAXIMUM BURR ALLOWANCE: .0015 [0.03]
4. MINIMUM TERMINAL RETENTION: 6 OZ.
5. MINIMUM GROUND PLANE RETENTION: 1 LB.
6. PARTS TO BE MOLD-TO-POSITION.
7. NOTE DELETED.
8. NOTE DELETED.
9. NOTE DELETED.
10. MAXIMUM VARIANCE: .002 [0.05].
11. -L PLATING CAN BE SUBSTITUTED FOR -F PLATING.
12. SEE http://www.samtec.com/processing/edgemt_tectalk/index.htm FOR INFORMATION ON PROCESSING EDGE MOUNT PARTS TO BOARDS.
13. -EM3 IS NOT A STANDARD OFFERING; AVAILABLE AS AN ASP ONLY. PLEASE CONTACT SAMTEC INTERCONNECT PROCESSING GROUP WITH ORDER INQUIRIES
14. NOTE DELETED.
15. PARTS WITHOUT -TY OPTION SHALL BE PACKAGED IN TRAYS.
16. AVAILABLE FOR EXISTING CUSTOMERS ONLY.

UNLESS OTHERWISE SPECIFIED, DIMENSIONS ARE IN INCHES.
TOLERANCES ARE:
DECIMALS: .XX: ±.01 [.3]; .XXX: ±.005 [.13]; .XXXX: ±.0020 [.051]
ANGLES: 2°

PROPRIETARY NOTE
THIS DOCUMENT CONTAINS INFORMATION CONFIDENTIAL AND PROPRIETARY TO SAMTEC, INC. AND SHALL NOT BE REPRODUCED OR TRANSFERRED TO OTHER DOCUMENTS OR DISCLOSED TO OTHERS OR USED FOR ANY PURPOSE OTHER THAN THAT WHICH IT WAS OBTAINED WITHOUT THE EXPRESSED WRITTEN CONSENT OF SAMTEC, INC.

samtec
the vital component

MATERIAL: DO NOT SCALE DRAWING — SHEET SCALE: 1:0.8
INSULATOR: LCP COLOR: BLACK
TERMINAL & GROUND PLANE: PHOS BRONZE

DESCRIPTION: .8mm EDGEMOUNT HS TERMINAL ASSEMBLY
DWG. NO. QTE-XXX-01-XXX-D-EMX-XX
BY: DEAN P 9/2/1999 — SHEET 1 OF 2

F:\DWG\MISC\MKTG\QTE-XXX-01-XXX-D-EMX-XX-MKT.SLDDRW

REVISION AG

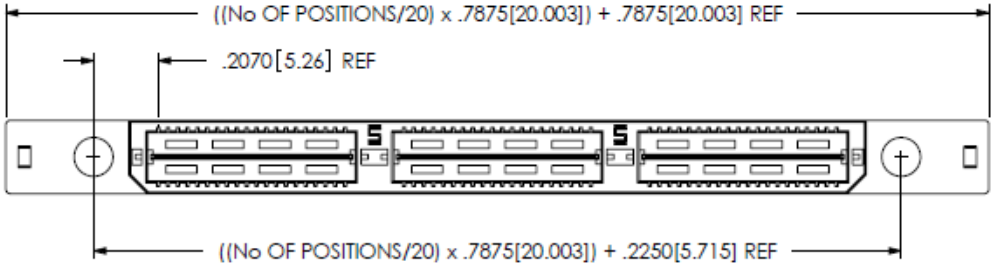

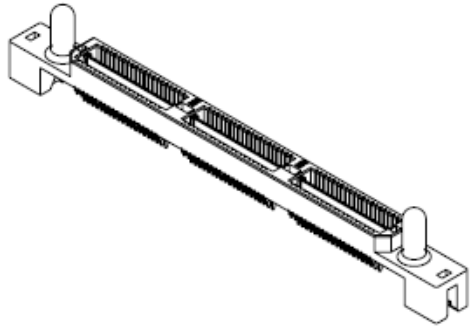

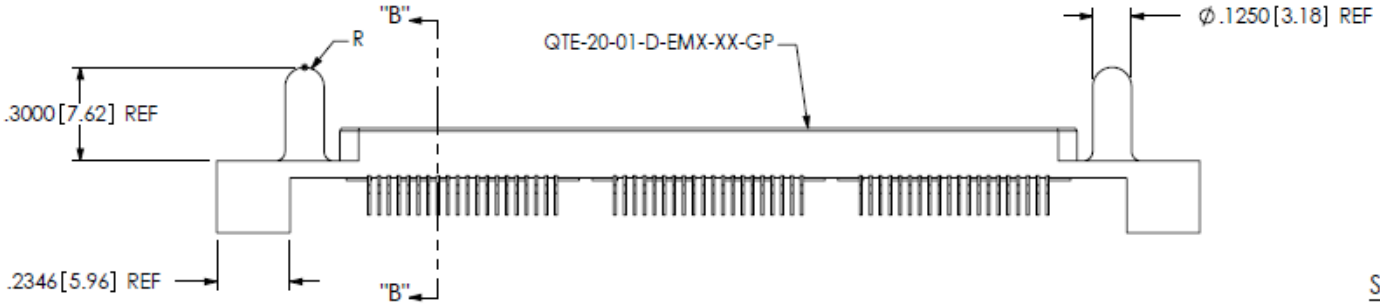

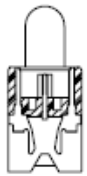

SECTION "B"-"B"

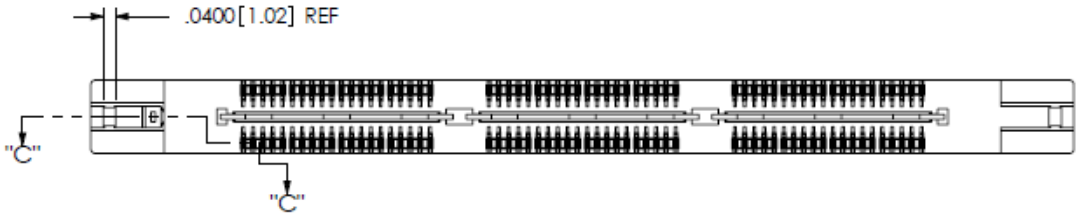

FIG 2
-GP OPTION
(SAME AS FIG 1, UNLESS OTHERWISE STATED)

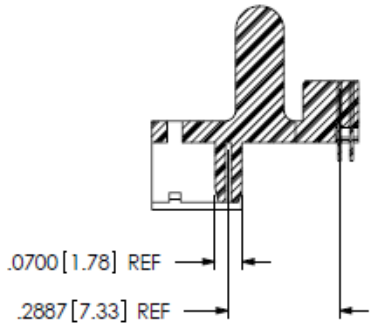

SECTION "C"-"C"
SCALE 2 : 1

PROPRIETARY NOTE
THIS DOCUMENT CONTAINS INFORMATION CONFIDENTIAL AND PROPRIETARY TO SAMTEC, INC. AND SHALL NOT BE REPRODUCED OR TRANSFERRED TO OTHER DOCUMENTS OR DISCLOSED TO OTHERS OR USED FOR ANY PURPOSE OTHER THAN THAT WHICH IT WAS OBTAINED WITHOUT THE EXPRESSED WRITTEN CONSENT OF SAMTEC, INC.

DO NOT SCALE DRAWING

SHEET SCALE: 1.625:1

samtec
the vital component

DESCRIPTION:
.8mm EDGEMOUNT HS TERMINAL ASSEMBLY

DWG. NO.
QTE-XXX-01-XXX-D-EMX-XX

BY: DEAN P 9/2/1999

SHEET 2 OF 2

F:\DWG\MISC\MKTG\QTE-XXX-01-XXX-D-EMX-XX-MKT.SLDDRW