REV.	DESCRIPTION	DATE	DRAFTER	APPROVER
V1.0	DWG.REL	2023.9.02	ZHANG	JIN

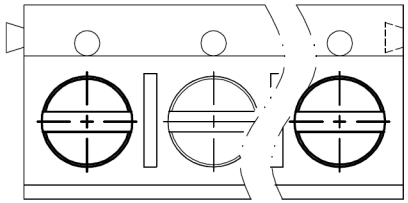

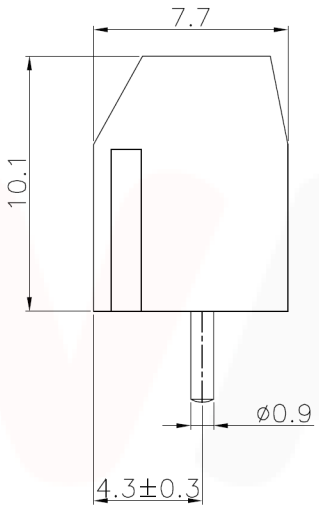

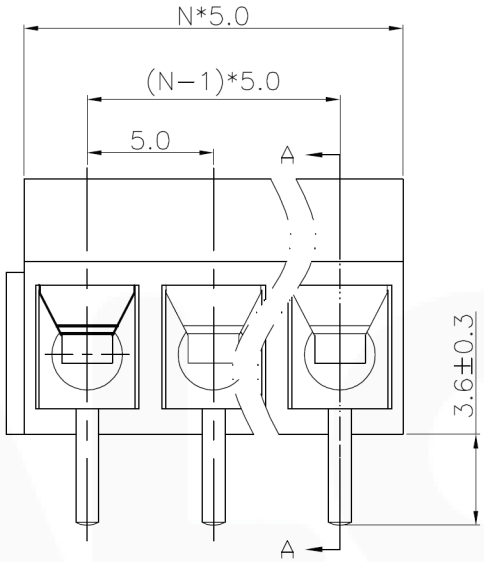

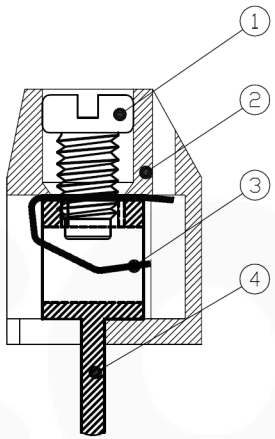

SECTION A-A

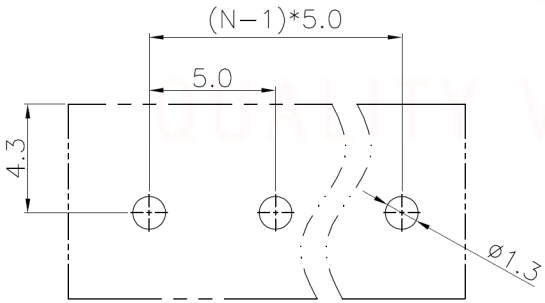

P.C.B.LAYOUT

- Material
  - ①Screw : M2.5 steel, Zinc plated, "−"slot type
  - ②Housing : PA66, UL94V−0
  - ③Reed : Copper alloy,Ni plated or stainless steel
  - ④Pin header : Copper alloy, Tin plated
- Electrical

	UL	IEC
Rated voltage :	300V	250V
Rated current :	12A	17.5A

  Contact resistance : 20mΩ(Max)
  Insulation resistance: 500MΩ/DC500V
  Withstanding Voltage : AC2000V/1min
  Wire range: 22−14AWG 0.5−2.5mm²
- Mechanical
  Operating temperature:−30℃∽+120℃
  Soldering temperature:250℃±5/5sec
  Torque: 0.4N.m (3.54Lb.in)
  Strip length: 4.5−5mm
- Conform to REACH and RoHS

HOW TO ORDER

VTB301V-xxP-B

xx = Total number of positions
2 - 12
Please note: Certain sizes may be subject to MOQ

Pitch range			Nominal dimension range					
>0 ~ 6	>6 ~ 10	>10 ~ 24	>0 ~ 30	>30 ~ 60	>60 ~ 100	>100 ~ 150	>150	0.1/10
±0.15	±0.20	±0.30	±0.30	±0.50	±0.70	±1.00	±1.30	±2°

DRAWING TYPE	CUSTOMER DRAWING		
SCALE	1:1	SHEET	1 OF 1
DRAWING NO.	W15000132		

PROJECTION		TITLE	
UNIT	mm		
SHEET SIZE	A4	SERIES	VTB301V

TOBY ELECTRONICS LTD
sales@toby.co.uk | toby.co.uk