- Protect Circuit from ESD
- Use with BivarOpto SM0603 - SM0805 Series LEDs
- Round or Flat Face Options
- May be heat staked or glued *(Locktite 414 adhesive recommended)*

Light pipes are ideally suited for applications where light from a SMD LED is carried directly to a front panel or enclosure. Light pipes protect circuits from accidental damage from ESD by isolating the PCB from potential contact.

VLP Series

Vertical Light Pipes

Part No.	Overall Height	X=Height	Face	Price Code
VLP-200-R	.200 (5.0)	.095 (2.4)	R=Round	G
VLP-250-R	.250 (6.4)	.145 (3.7)	F=Flat	G
VLP-300-R	.300 (7.6)	.195 (5.0)		G
VLP-350-R	.350 (8.9)	.245 (6.2)		H
VLP-400-R	.400 (10.2)	.295 (7.5)		H
VLP-450-R	.450 (11.4)	.345 (8.8)		H
VLP-500-R	.500 (12.7)	.395 (10.0)		H
VLP-550-R	.550 (13.9)	.445 (11.5)		I

Material Specifications:
Clear Polycarbonate

Oxygen Rating Index:
Over 28%

Examples:
VLP 250 R
- R — *Face*
- 250 — *Overall Height*
- VLP — *Series*

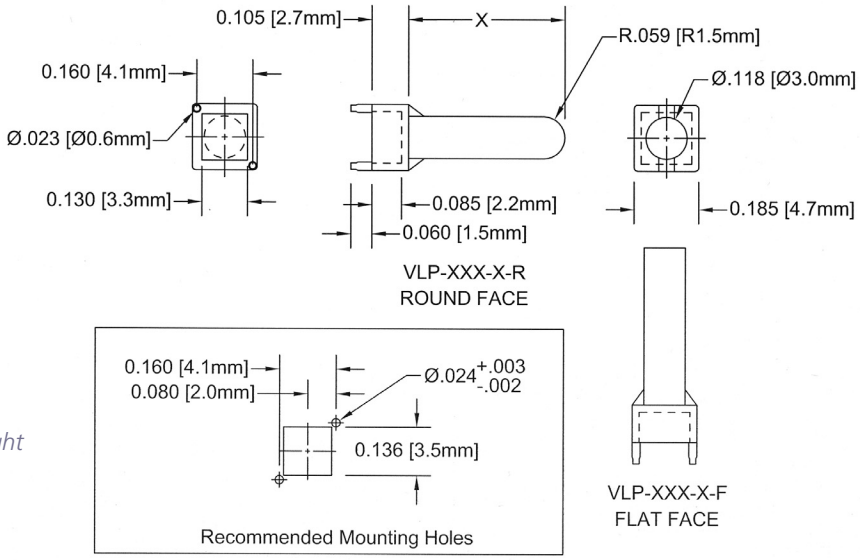

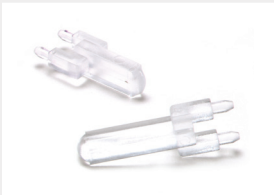

- Other Lengths are available *(Custom order)*
- Ideal for Bar Graph Arrays
- Works with SM0603 and SM1210 Series LEDs

VLPR Series

Vertical Rectangular Light Pipes
Price Code: E
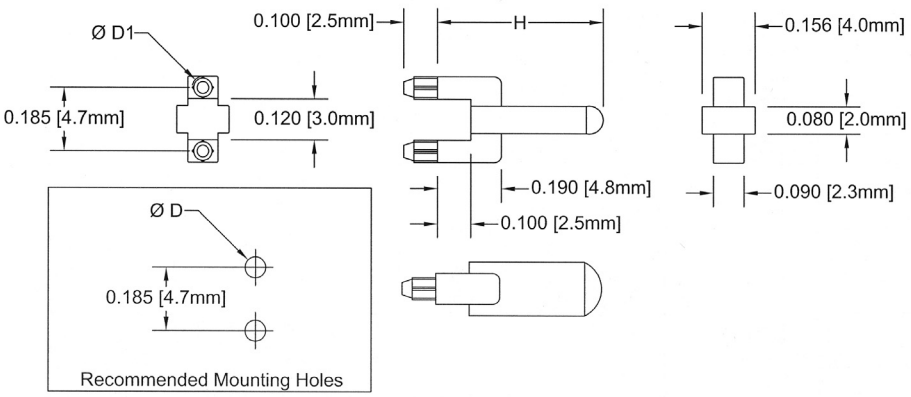
Part No.	H	ØD +.003 -.002	ØD1
VLPR-24-500-2	.500 (12.7)	.062 (1.6)	.065 (1.7)
VLPR-24-650-2	.650 (16.5)	.062 (1.6)	.065 (1.7)
VLPR-24-858-2	.858 (21.8)	.058 (1.5)	.060 (1.5)
VLPR-24-1028-2	1.028 (26.1)	.058 (1.5)	.060 (1.5)