samtec

E.L.P.™
EXTENDED LIFE PRODUCT
10 year Mixed Flowing Gas with 50µ" Gold
Call Samtec for maximum mated cycles

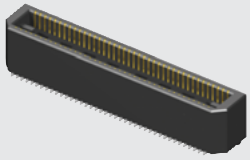

BTE–040–02–L–D–A

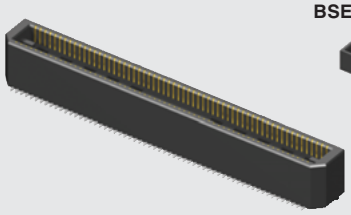

BTE–060–02–F–D–A

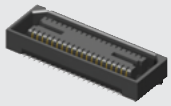

BSE–020–01–F–D–A

(0,80 mm) .0315"

BTE, BSE SERIES

BASIC BLADE & BEAM HEADER & SOCKET

SPECIFICATIONS

For complete specifications and recommended PCB layouts see www.samtec.com?BTE or www.samtec.com?BSE

Insulator Material: Liquid Crystal Polymer
Contact Material: Phosphor Bronze
Plating: Au or Sn over 50µ" (1,27 µm) Ni
Current Rating: 2 A per pin (1 pin powered per row)
Operating Temp Range: -55°C to +125°C
Voltage Rating: 225 VAC with 5 mm Stack Height
Max Cycles: 100
RoHS Compliant: Yes

Processing:

Lead-Free Solderable: Yes
SMT Lead Coplanarity:
(0,10 mm) .004" max (020-080)
(0,15 mm) .006" max (100-120)
Board Stacking:
For applications requiring more than two connectors per board or 80 positions or higher, contact ipg@samtec.com

RECOGNITIONS

For complete scope of recognitions see www.samtec.com/quality

FILE NO. E111594

MATED HEIGHT

LEAD STYLE	MATED HEIGHT*
–01	(5,00) .197
–02	(8,00) .315

*Processing conditions will affect mated height.

ALSO AVAILABLE (MOQ Required)

- 30µ" (0,76 µm) Gold
- Edge Mount Capability
- Friction Lock option
- 11 mm, 14 mm, 16,10 mm, 19,10 mm, 22 mm, 25 mm and 30 mm Stack Height (Caution: Some automatic placement/ inspection machines may have component height restrictions. Please consult machinery specifications.)

Contact Samtec.

Note: Some lengths, styles and options are non-standard, non-returnable.

BTE – NO. OF POSITIONS PER ROW – LEAD STYLE – PLATING OPTION – D – A – OTHER OPTION

Mates with: BSE

–020, –040, –060, –080, –100, –120

Specify LEAD STYLE from chart

–F = Gold Flash on contact, Matte Tin on tail

–L = 10µ" (0,25 µm) Gold on contact, Matte Tin on tail

–C* = Electro-Polished Selective 50µ" (1,27 µm) min Au over 150µ" (3,81 µm) Ni on Signal Pins in contact area, Matte Tin over 50µ" (1,27 µm) min Ni on all solder tails

***Note:** –C Plating passes 10 year MFG testing

–K = (7,00 mm) .275" DIA Polyimide Film Pick & Place Pad

–TR = Tape & Reel (60 positions maximum)

LEAD STYLE	A
–01	(4,27) .168
–02	(7,21) .284

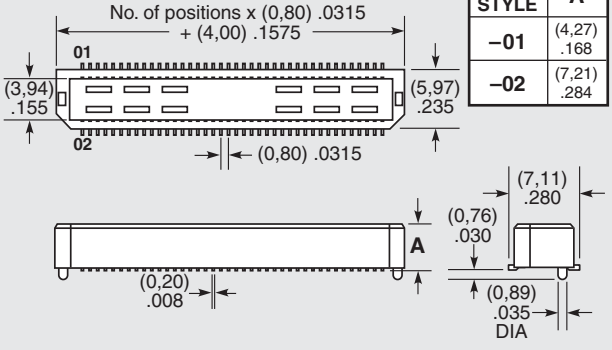

RUGGEDIZED by SAMTEC
• Passes 10 year MFG

BSE – NO. OF POSITIONS PER ROW – 01 – PLATING OPTION – D – A – OTHER OPTION

Mates with: BTE

–020, –040, –060, –080, –100, –120

–F = Gold Flash on contact, Matte Tin on tail

–L = 10µ" (0,25 µm) Gold on contact, Matte Tin on tail

–C* = Electro-Polished Selective 50µ" (1,27 µm) min Au over 150µ" (3,81 µm) Ni on Signal Pins in contact area, Matte Tin over 50µ" (1,27 µm) min Ni on all solder tails

***Note:** –C Plating passes 10 year MFG testing
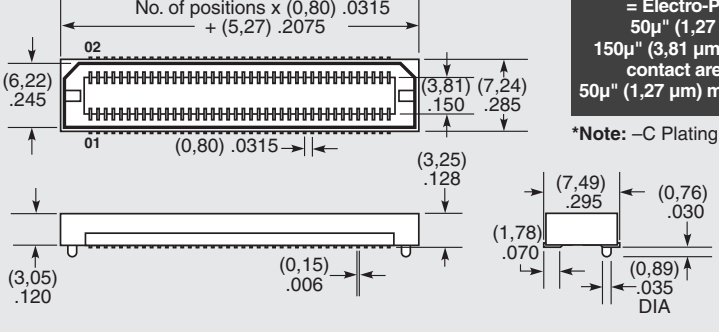
–TR = Tape & Reel (80 positions maximum)