VALCON
QUALITY VALUE COMPONENTS

ENPTx Series - Nylon-Insulated Pin Terminals (DOUBLE CRIMP)

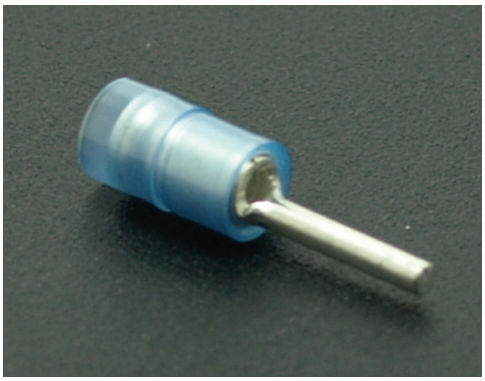

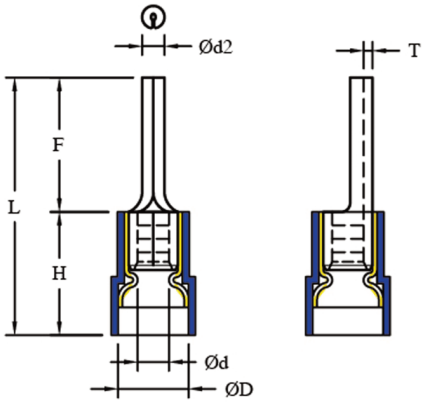

WIRE RANGE A.W.G mm²	ITEM NO.	Dimensions (mm)						
		Ød2	F	L	H	Ød	ØD	T
22-16 A.W.G. 0.5-1.5 mm²	ENPT1-10C	1.9	10.0	21.0	11.0	1.7	4.5	0.75
	ENPT1C		12.0	23.0				
16-14 A.W.G. 1.5-2.5 mm²	ENPT2-10C	1.9	10.0	21.0	11.0	2.3	5.0	0.8
	ENPT2C		12.0	23.0				
12-10 A.W.G. 4-6 mm²	ENPT5C	2.7	14.0	27.0	13.0	3.4	6.7	1.0

Specification:

Insulator Material Nylon
Contact Material: Copper
Contact Plating: Tin

TOBY
THE VITAL COMPONENT

the vital component

Tel: 01295 271777 Fax: 01295 271744 Web: www.toby.co.uk email: sales@toby.co.uk